CB-1 FOUNDATION DRAIN SILT BASIN

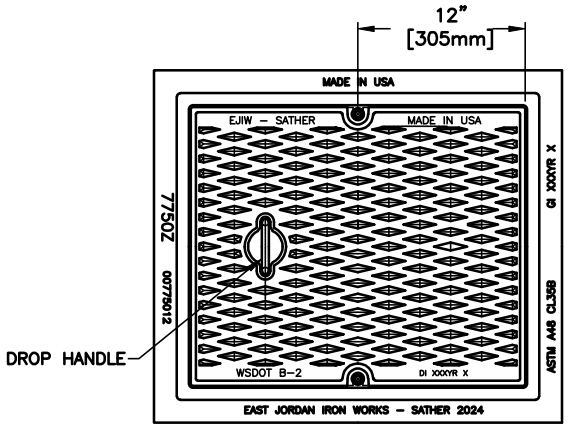

PLAN VIEW

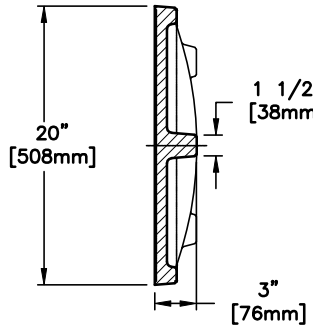

COVER SECTION

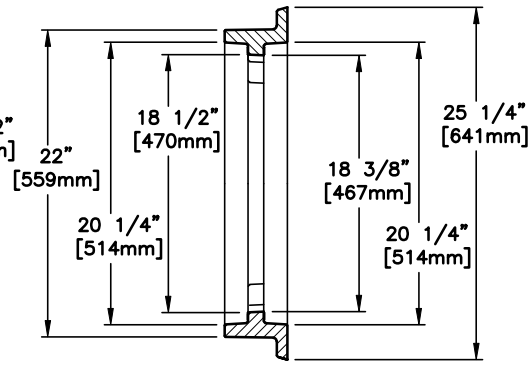

FRAME SECTION

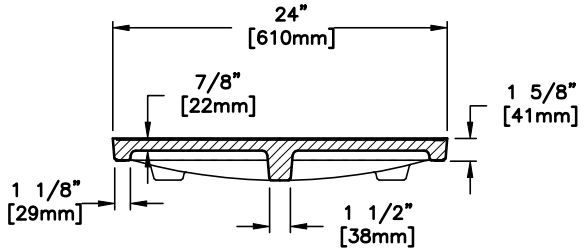

COVER SECTION

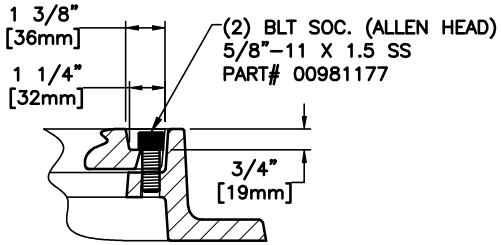

BOLTING DETAIL

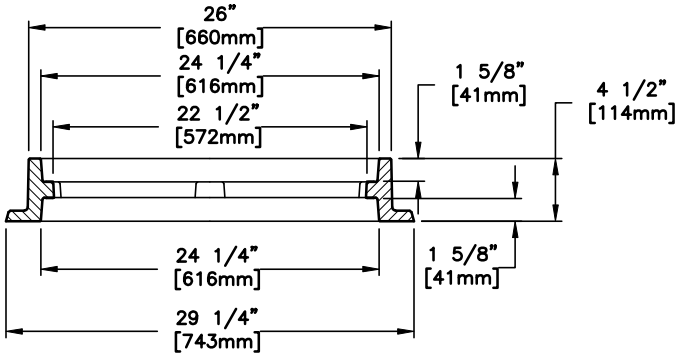

FRAME SECTION

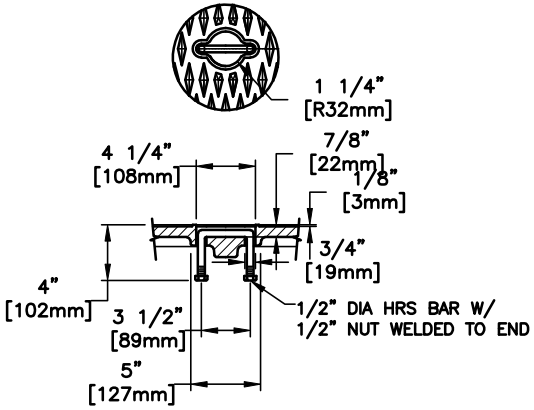

DROP HANDLE DETAIL

EAST JORDAN
IRON WORKS, INC.
P.O. BOX 439
EAST JORDAN, MI. 49727
1–800–874–4100
FAX 231–536–4458

DRAWN	DATE
SBB	04/22/02
APPROVED	DATE

COVER & FRAME ASSEMBLY

PRODUCT NO.
00775070
CENTER BOLTING

CATALOG NO.
7750A DI
7750Z REVERSIBLE

REF. PRODUCT NO.
00775012
00775022

EST. WT.
COVER: 150 LBS 68kg
FRAME: 160LBS 73kg
UNIT: 310 LBS 141kg

OPEN AREA
N/A

MAT'L SPEC.
COVER – DUCTILE IRON
ASTM A536
FRAME – CAST IRON
ASTM A48 CL35

LOAD RATING
HEAVY DUTY

CB-1 FOUNDATION DRAIN SILT BASIN

Quality Concrete Products, Inc., 4200 78th St. SW, Mukilteo, WA 98275, Ph: (425) 355-5510, Fax: (425) 355-5559

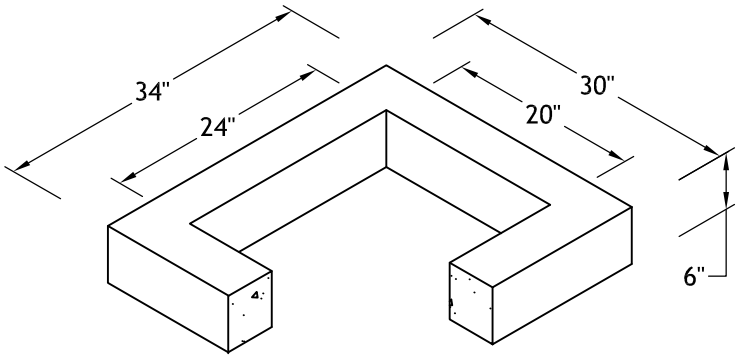

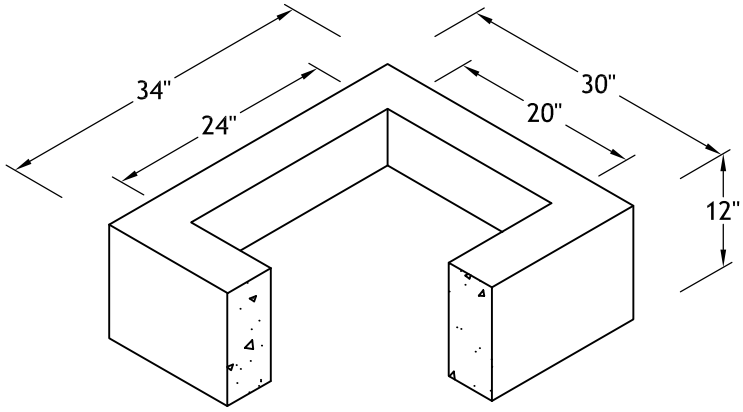

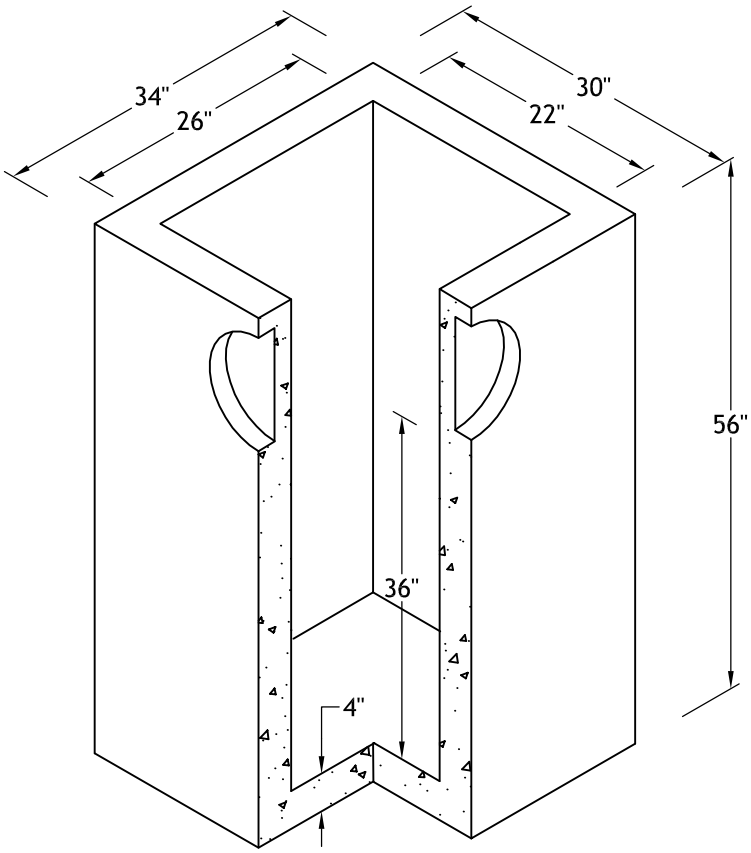

CB12 TYPE 241 \ TYPE 1P CATCH BASIN

REINFORCING IS 0.12 SQ. INCH/LINEAR FOOT.

FOUR 12" KNOCKOUTS PROVIDED FOR PIPE ENTRY. WEIGHT IS 2420 LBS.

#4 BAR USED IN BASE BOTTOM REINFORCING TO COMPLY WITH CITY OF SEATTLE SPECIFICATIONS FOR TYPE 241.

6" RISER

REINFORCING IS 0.12 SQ. INCH/LINEAR FOOT.

WEIGHT IS 280 LBS.

12" RISER

REINFORCING IS 0.12 SQ. INCH/LINEAR FOOT.

WEIGHT IS 560 LBS.

ALL COMPONENTS CONFORM TO WASHINGTON STATE APWA/WSDOT STANDARD SPECIFICATIONS.

CONFORMS TO CITY OF SEATTLE STANDARD PLAN 241

CB-1 FOUNDATION DRAIN SILT BASIN

KOR-N-SEAL® I & II

FLEXIBLE PIPE-TO-MANHOLE CONNECTORS

SPECIFICATION SHEET

KOR-N-SEAL I - WEDGE KORBAND CONNECTOR ASSEMBLY

Install Kor-N-Seal I - Wedge Korband with Socket Wrench & Torque Limiter

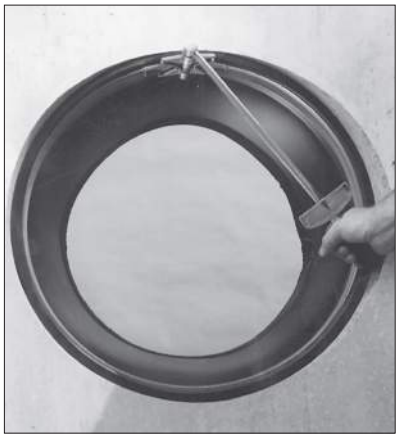

Install Kor-N-Seal II - Wedge Korband with Standard Torque Wrench

Install Pipe Clamp(s) with T-Handle Torque Wrench

www.npc.com
250 Elm Street • P.O. Box 301
Milford, NH 03055, U.S.A.
Tel: 603-673-8680 • 800-626-2180 • Fax: 603-673-7271

02/06

CB-1 FOUNDATION DRAIN SILT BASIN

KOR-N-SEAL® I & II

Flexible Pipe-to-Manhole Connectors

SPECIFICATION SHEET

PERFORMANCE

Test	ASTM Method	Test Requirements	Kor-N-Seal® I & II
Head Pressure	C923 - 7.1	0° - 13 psi (30 ft) for 10 min. 7° - 10 psi (23 ft) for 10 min.	+13 psi for 10 min. +10 psi for 10 min.
Deflection Test	C923 - 7.2.2	7° in any direction	Over 7° in any direction
Load Test	C923 - 7.2.3	150 lbs/in. pipe dia.	Over 150 lbs/in. pipe dia.

Performed on all standard sizes of Kor-N-Seal Connectors.

RESILIENT EPDM OR POLYISOPRENE RUBBER

Conforms to ASTM C923

Test	ASTM Method	Test Requirements	TEST RESULTS Kor-N-Seal® I & II
Chemical Resistance	D543, at 22°C for 48 h		
1 *N* Sulfuric Acid		No weight loss	No weight loss
1 *N* Hydrochloric Acid		No weight loss	No weight loss
Tensile Strength	D412	1200 psi	1580 psi
Elongation at Break		350% min.	500%
Hardness	D2240 (shore A durometer)	± 5 from the manufacturer's specified hardness	48 ± 5
Accelerated Oven-Aging	D573 70 ± 1°C for 7 days	Decrease of 15%, max. of original tensile strength, decrease of 20% max. of elongation	10.1% tensile decrease 14.0% elongation decrease
Compression Set	D395, method B, at 70°C for 22 h	Decrease of 25%, max. of original deflection	13% decrease
Water Absorption	D471, immerse 0.75 by 2-in. specimen in distilled water at 70°C for 48 h	Increase of 10%, max. of original by weight	.8% increase
Ozone Resistance	D1171	Rating 0	Rating 0
Low-temperature Brittle Point	D746	No fracture at -40°C	No fracture at -40°C
Tear Resistance	D624, method B	200 lbf/in.	No tear at 210 lbf/in.

INTERNAL KORBAND

Conforms to ASTM C923, ASTM A666, and A240

– Korband Assembly is manufactured of 300 series stainless steel.
– Toggle Expander is made of 300 series stainless steel.
– The 106/406 series Wedge Expander is made from reinforced nylon or 300 series stainless steel.
– The 206/306 series Wedge Expander is made from 300 series stainless steel.

EXTERNAL PIPE CLAMP

Conforms to ASTM C923, ASTM A666, and A240

External take-up clamps are manufactured of 300 series stainless steel.

www.npc.com
250 Elm Street • P.O. Box 301
Milford, NH 03055, U.S.A.
Tel: 603-673-8680 • 800-626-2180 • Fax: 603-673-7271